ELECTRIC PLATFORMS

Electric powered access platforms: Raising and lowering personnel.

MANITOU

MANITOU four ranges of

INDEX //

Vertical work-platforms p. 4

Articulated boom platforms p. 10

Bi-Energy articulated boom platforms p. 18

Scissor platforms p. 20

MANITOU services p. 26

Technical information p. 28

electric powered access

As a world leader in all-terrain working machinery, MANITOU is known for **INNOVATION, SAFETY and the QUALITY** of its product ranges. MANITOU designs and manufactures products **precisely adapted to the needs of its clients** (in construction, agriculture and industry). **Reliability, performance and simplicity of MANITOU** machines combine to make equipment of enhanced value. So it is natural that Manitou should bring all its expertise, and that of its network, to develop **electrical powered platforms specifically adapted for industry**.

You will find a **wide choice of platforms**, each perfectly suited to the needs of your business, whether for indoor or outdoor use, and whether you are a hirer or an operator. MANITOU also guarantees rapid and effective support. **Every situation is planned for.**

Electric platforms

a range of **11 models**

V

VJR

AETJ

SE-SEC

Vertical platforms

3 MODELS AVAILABLE:

(60V)

(80VJR)

(100VJR)

Compactness and manoeuvrability to ensure maximum utilisation.

You can work with ease up to a height of 10 m with our vertical platforms. They are compact, light and manoeuvrable, hence ideal to access the most difficult places. You can efficiently carry out your handling or maintenance operations indoors and also outdoors on firm ground.

“I can easily get to wherever I wish to be in complete safety.”

Vertical platforms

60V / 80VJR / 100VJR

High accessibility

You gain in manoeuvrability in confined spaces by virtue of the limited space requirement of our vertical platforms. No matter which model, access to a building via a standard door is no problem…. You no longer require ladders or scaffolding, you can carry out your maintenance operations simply and safely. Our range of platforms is light, hence easily transportable, so you increase the time available to work fully independently.

Minimal maintenance

You significantly reduce costs of maintenance. The telescopic system is recognised by our clients for its reliability, and robustness but also for its ease of maintenance. There is easy access to the batteries, notably with the 60V model, due to the sliding drawer (no screw to undo). Maintenance is therefore even more rapid.

most suitable working **areas** for the **60V**

- Industrial maintenance
- Maintenance of equipment in public/municipal establishments
- Preparation of orders
- Finishing-off work
- …

Public spaces: museums, hotels

Warehouses

Large storage areas

“ Even in cluttered spaces, I can work in a large area without restriction. ”

Vertical platforms

60V / 80VJR / 100VJR

Safety and stability

You can work at a height or in congested spaces without difficulty. Each model has high stability which our engineers have made possible through working on the dimensions and the positioning of component parts. Comfort and stability in the platform (basket) are achieved through the telescopic tube technique developed by MANITOU.

Although very compact, our VJR models function over a large working area, and have the best capability for reach on the market, due to the pendular arm and rotating turret.

Intuitive controls

Your machine is easy to operate. The controls were devised to be manipulated quickly and easily. Movements are made precisely and neatly due to proportional controls. You can work in total safety and comfort within the spacious baskets in all our range of vertical platforms.

Most suitable areas for VJR

- Second-phase outdoor work (on firm ground): painting, sign-fixing
- Second –phase interior: Air-conditioning, insulation, fire-detection systems, lighting, electric wiring, piping
- Industrial applications: Cleaning, warehousing, supermarket chains, production industries, industrial maintenance, stock-checking
- Public buildings, gymnasiums etc.
- Agricultural Storage
- ...

Public spaces

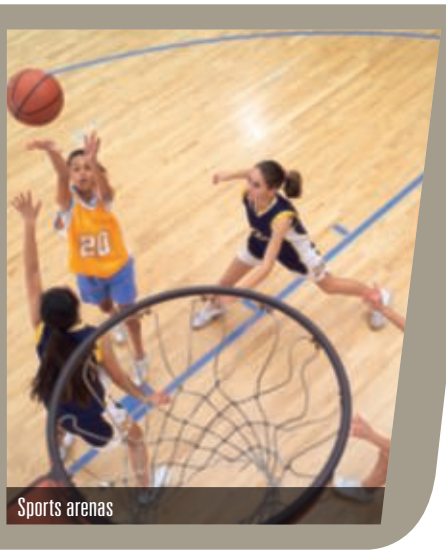

Sports arenas

Articulated platforms

5 MODELS AVAILABLE:

(120AETJ-C) — (150AETJ-C) — (170AETJ-L) — (150AETJ-L BIENERGY) — (170AETJ-L BIENERGY)

You can work around all obstacles, indoors or outdoors.

If you work in restricted and congested places such as warehouses, production areas, pedestrian zones, this range is the ideal solution. Height, weight, manoeuvrability, multi-purpose application... The self-propelled articulated electrical MANITOU platforms will answer all your needs, outdoors or indoors. This can be in the 3D version for even more accessibility, or the Bi-Energy version for greater independence... The choice is yours to find the model best adapted to your conditions.

“I enjoy freedom of access and movement beyond compare.”

Articulated platforms

120AETJ-C / 150AETJ-C / 170AETJ-L / 150AETJ-L / 170AETJ-L

Compactness and lightness

All our models are under 2 metres high with arms folded back and thus you can easily access all industrial buildings. The models designated 'compact' allow access to very small or cluttered places, and enable their ability to place objects in industrial sites. Our models are easily transported and offer excellent stability.

Turing circle, overhang, height

You can reach the furthest places with ease whichever model is used. The 120 AETJ-C has the best turning circle to compactness ratio in its category. The 170 AETJ-L is noted for its exceptional turning space and minimum overhang when working without the need to move the machine. The pendular action greatly increases the size of the work area.

3D option

The 120 AETJ-C and 150 AETJ-C have the 3D pendular action and thus allow you to negotiate flexibly around obstacles such as piping, beams or pillars. This rotation system significantly increases your accessibility and working space for enhanced productivity.

Most suitable working areas for AETJ

- Second phase work: air-conditioning, insulation, fire-detection systems, lighting, electric working, plumbing, fitting of windows, signs
- Industrial use: cleaning, warehouses, production areas, industrial maintenance
- Placing of signs, gymnasiums etc.
- Building, renovation.
- Aeronautical industry: inspection, maintenance, repairs
- Temporary events: preparation of exhibitions, entertainment/shows
- ...

Airports

Warehouses

“For my work, indoors and out, **everything is under control.**”

Articulated platforms

120AETJ-C / 150AETJ-C / 170AETJ-L / 150AETJ-L / 170AETJ-L

Robustness

You can count on your machine for a long working life. The reinforced structure of the arms increases the rigidity and the comfort for the operator through a well-balanced basket. On the ground, this stability equals safety, whatever the height of working and the turning circle.

Safety at work

You can work in total safety. The AETJ platforms are equipped with safety protection that complies with European safety directives:

- the incline detector (elevation is automatically cut out if the gradient is greater than 3' or 5')
- the charging control
- the operating lever inside the basket and on the ground
- the system of negative braking (it requires a positive movement of the switch to be released)
- the safety pump to allow the operator to descend rapidly in case of emergency.

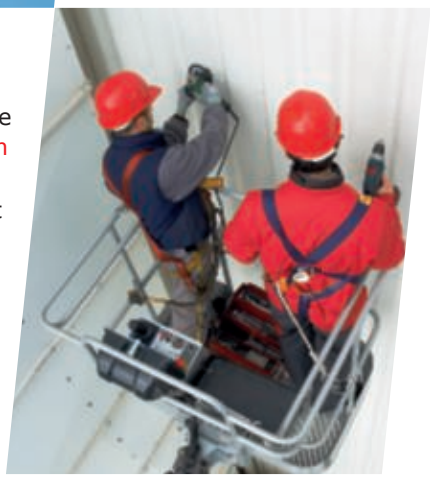

Intuitive switches

You can easily operate your machine with the aid of intuitive proportional switches, which are ideal for rapid application. The movement from above can be made neatly and safely.

Most suitable working areas for AETJ

- Second phase work: air-conditioning, insulation, fire-detection systems, lighting, electric working, plumbing, fitting of windows, signs
- Industrial use: cleaning, warehouses, production areas, industrial maintenance
- Placing of signs, gymnasiums etc.
- Building, renovation.
- Aeronautical industry: inspection, maintenance, repairs
- Temporary events: preparation of exhibitions, entertainment/shows
- ...

Industrial sites

“I can carry out more work **without moving my machine.**”

Articulated platforms

120AETJ-C / 150AETJ-C / 170AETJ-L / 150AETJ-L / 170AETJ-L

Comfort on the working platform

With the AETJ range you can be sure of good working conditions. Our baskets are spacious, robust and safe. The floor of the platform is light-admitting to improve ground visibility, and the double handrails enable you to avoid trapping your hands. Your tools are always within reach, thanks to the tool-racks. The drive lever can be protected from being soiled during dirty operations by a cover which ensures that your machine stays in good condition so as to achieve a better resale value.

Independence

You increase your productivity with the traction batteries. Their independence and longer life respond to your need for intensive operation. The indicator on the control post allows you to check easily the state of charge of your machine.

Simplified maintenance

The integrated CAN-bus technology facilitates a rapid diagnosis of the condition of your platform immediately and on-site. Furthermore, access to different components is easily facilitated enabling you to reduce the time the machine is out of use.

Most suitable working areas for AETJ

- Second phase work: air-conditioning, insulation, fire-detection systems, lighting, electric working, plumbing, fitting of windows, signs
- Industrial use: cleaning, warehouses, production areas, industrial maintenance
- Placing of signs, gymnasiums etc.
- Building, renovation.
- Aeronautical industry: inspection, maintenance, repairs
- Temporary events: preparation of exhibitions, entertainment/shows
- ...

Second phase work

Building sites

“ I’m always self-sufficient right from the start. ”

Articulated platforms

120AETJ-C / 150AETJ-C / 170AETJ-L / 150AETJ-L / 170AETJ-L

You increase productivity !

The Bi-Energy system is an innovative process which combines the silent and non -pollutant working of electrical technology with the autonomy of a Diesel engine. No longer is there a need to return to the charging station. Ideal for intensive applications which require indoor and outdoor operation.

Long-term effect

The Diesel engine drives a generator which transmits energy to the batteries. You gain in independence from all electrical sources. When the batteries have run down, the engine takes over, allowing you to work while at the same time recharging the batteries.

Usage inside and outdoors

The Bi-Energy platforms are truly adapted to changes in environment. You pass very easily from the electric mode working indoors (non-polluting, more economical) to the Diesel mode outdoors.

Partial all-terrain models

The Bi-Energy models are fitted with semi-industrial tyres at low pressure. You can work outdoors on non-firm ground, and indoors, without damage to the ground. With their capacity for adhesion to the ground they facilitate safety of movement.

Most suitable working areas for Bi-Energy

- Second phase work: air-conditioning, insulation, fire-detection systems, lighting, electric working, plumbing, fitting of windows, signs
- Industrial use: cleaning, warehouses, production areas, industrial maintenance
- Placing of signs, gymnasiums etc.
- Building, renovation.
- Aeronautical industry: inspection, maintenance, repairs
- Temporary events: preparation of exhibitions, entertainment/shows
- ...

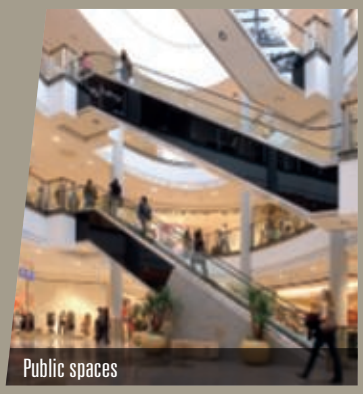
Public spaces

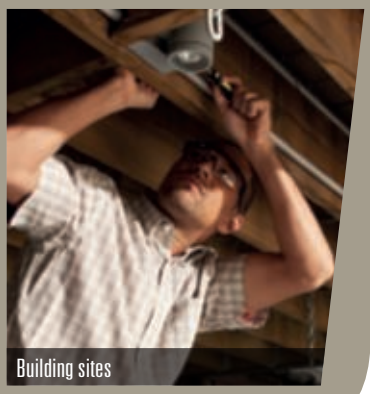
Building sites

Scissor platforms

3 MODELS AVAILABLE:

(78SEC)

(100SEC)

(120SE)

How to maximise your higher-altitude work.

The MANITOU scissor platforms have a high working capacity and extendable working area. No need to ascend and descend repeatedly: you can control everything, without risk, from the platform. This type of platform is ideal for reaching restricted spaces while also bringing the materials necessary for work at a high level. Your tasks are completed in safety.

> “I can get in everywhere without lack of space in the basket.”

Scissor platforms

78SEC / 100SEC / 120SE

High accessibility

Workplace aisles and difficult-access places are no longer an obstacle. Equipped with a narrow chassis, the 78 and 100 SEC models can easily pass through a standard door. As for the 120SE model, it needs a width of 1.20 m. You increase your manoeuvrability in restricted spaces due to the small turning circle and the exceptional reduced overall dimensions.

Intuitive controls

You can operate your machine with ease due to the intuitive controls. The flexible and easy driving of the machine ensures that you have comfort and safety. The indicator on the control panel allows you easily to check the state of charge of your machine.

Suitable working areas for SEC/SE

- Second phase: painting, lighting, wiring, insulation, air-conditioning
- Industrial cleaning
- Stock checking
- Special events (exhibitions/Shows - outdoors)
- ...

Production sites

Building sites

Offices

“ I carry out my work at high level with all the equipment I need. ”

Scissor platforms

78SEC / 100SEC / 120SE

Self-sufficiency

Keep your work going longer: our scissor platforms have the ECU (Electronic Control Unit) system which improves the efficiency and longevity of the battery. You will increase productivity.

Robustness and safety.

You can work in confidence at 7.8 m, 10 m or 12 m. The 78/100 and 120 are equipped with double scissors with reinforced arms with increased dimension axes. An anti-slip coating on the basket also contributes to your safety.

Suitable working areas for SEC/SE

- Second phase: painting, lighting, electricity, air-conditioning, insulation
- Industrial cleaning
- Stock-taking
- Temporary events
- Logistics
- ...

Industrial sites

Building sites

Services MANITOU

Proximity and availability as you require

The infrastructure is at your service! In addition to geographical proximity, you can rely on the technical expertise and advice of your MANITOU agents, at the time of purchase, and throughout the life of your machine. To help you work in the best possible conditions, MANITOU provides you with the best possible speed of delivery of spare parts for your equipment.

Responsiveness and technical expertise which you need from a suppler

For the technical follow-up on your equipment you can rely on experienced professionals! You also can have the peace of mind of every MANITOU owner by calling on MANITOU experts, regularly retrained over the range of our products and available to answer your questions, whether you are an owner-operator or hirer. Maintenance and repair works are carried out on site following a simple telephone call, and in the time-frame agreed, According to your system of management you can plan and spread your maintenance charges and benefit from our offers of maintenance contract and/or extension of guarantee.

Made-to-measure financing to protect your budget

You can plan the purchase of your platform with peace of mind using the MANITOU financing schemes. You have access to solutions that are simple and adapted to your needs and to the season. If you wish to make a speedy investment without exceeding your available funds, you should consider asking us for a tailor-made approach which takes your financial situation into account.

* Manitou finance solutions available in certain countries.

“ I can count on the reliability of the MANITOU equipment and their personnel. ”

60 V

	60 V
Working height	5.70 m
Platform height	3.70 m
Capacity	227
Number of persons (indoor/outdoor)	2/1
Basket (width and length)	0.74 m x 1.04 m
1. Overall width	0.76 m
2. Overall length	1.36 m
3. Overall height	1.70 m
4. Interior turning circle	0.37 m
5. Exterior turning circle	1.40 m
6. Ground clearance	7.60 cm
7. Wheelbase	0.98 m
Speed of forward movement	3.65 kph
Working speed	1.00 kph
Maximum slope accessible	25 %
Maximum tilt	3 % / 2°
Tyres	30.50 mm dia.
Driving wheels	2 (front)
Steering/directional wheels	2 (front)
Weight (varies according to options & standards of the country)	776 kg
Batteries	220 Ah / 24 V
Integrated charger	20 Ah / 24 V

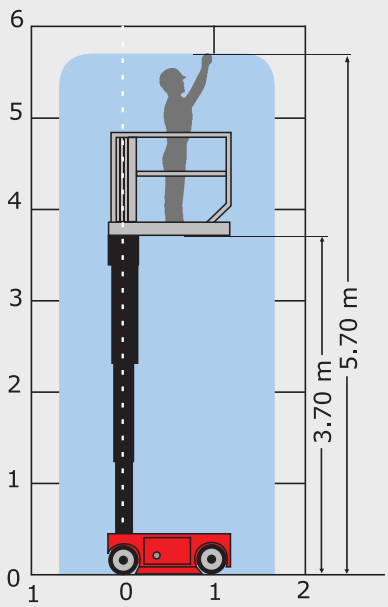

Standard equipment
Proportional switches/levers
Forward movement possible at maximum height
Sound and visual alarm in case of excessive slant and overload
Integrated charger
Emergency manual descent
Negative braking system
Sound warning system inside the platform
Hour meter
Indication of state of charge of batteries
Hooks for sling loading/lifting
Integrated diagnostic aid
Anti-roll bar
Tyres with non-marking edges

Optional equipment
Initial certificate of verification prior to entry into service
Safety harness

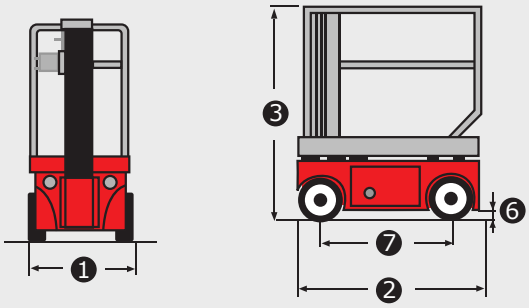

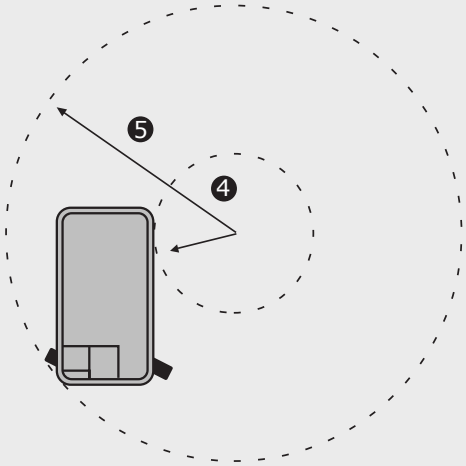

This brochure describes versions and configuration options for Manitou products which may be fitted with different equipment. The equipment described in this brochure may be standard, optional or not available depending on version. Manitou reserves the right to change the specifications shown and described at any time and without prior warning. The manufacturer is not liable for the specifications given. For more information, contact your Manitou dealer. Non-contractual document. Product descriptions may differ from actual products. List of specifications is not comprehensive. The logos and visual identity of the company are the property of Manitou and may not be used without authorisation. All rights reserved. The photos and diagrams contained in this brochure are provided for information only.
MANITOU BF SA - Limited company with board of directors - Share capital: 39,547,824 euros - 857 802 508 RCS Nantes

FT012EN_A_0812_60V

80 VJR / 100 VJR

	80 VJR	100 VJR
Working height	7.70 m	9.90 m
Platform height	5.70 m	7.90 m
Articulation height	4.23 m	6.67 m
Outreach	3.25 m	3.15 m
Jib tilting	+70° / - 70°	
Basket rotation	+70° / - 70°	
Turret rotation	350°	
Capacity	200 kg	
Number of persons (indoor/outdoor)	2/1	
Basket (width and length)	0.90 x 0.75 m	
1. Overall width	0.99 m	
2. Overall length	2.95 m	2.82 m
3. Overall height	1.99 m	
4. Interior turning circle	0.49 m	
5. Exterior turning circle	1.98 m	
6. Ground clearance	10 cm	
7. Wheelbase	1.20 m	
Speed of forward movement	4.50 kph	
Working speed	0.65 kph	
Maximum slope accessible	25 %	
Maximum tilt	3.5 % / 2°	
Tyres	16-5-11 1/4	
Driving wheels	2 (back)	
Steering/directional wheels	2 (front)	
Weight (varies according to options & standards of the country)	2250 kg	2650 kg
Batteries	250 Ah (C5) / 24 V	
Integrated charger	30 Ah / 24 V	

80 VJR

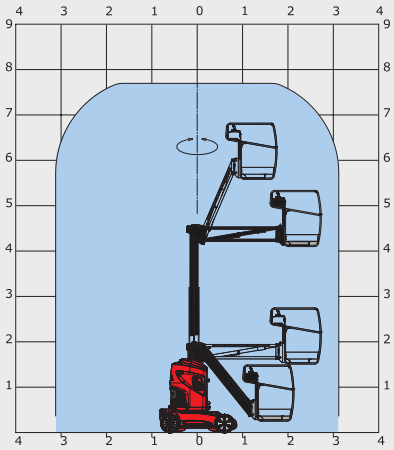

100 VJR

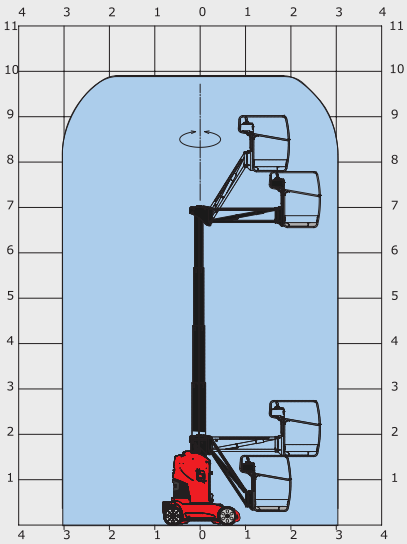

Standard equipment
Proportional switches/levers
Forward movement possible at maximum height
Sound and visual alarm in case of excessive slant and overload
Integrated charger
Emergency manual descent
Negative braking system
Sound warning system inside the platform
Hour meter
Indication of state of charge of batteries
Hooks for sling loading/lifting
Integrated diagnostic aid
Tyres with non-marking edges
Tyres crimped non-marking wheels
All-road non-marking wheels
Basket with transparent floor
Bus CAN technology
Tool box inside platform

Optional equipment
Flashing lights
Working light
Predisposition of air
Predisposition of water
230V power input with differential circuit-breaker
Special paint
Biodegradable oil
Central topping-up of batteries
Initial certificate of verification prior to entry into service
Safety harness
Oil for extreme low temperatures
Battery frost protection

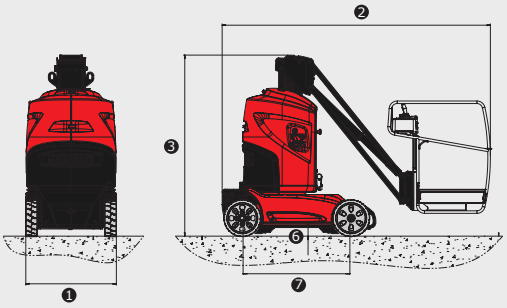

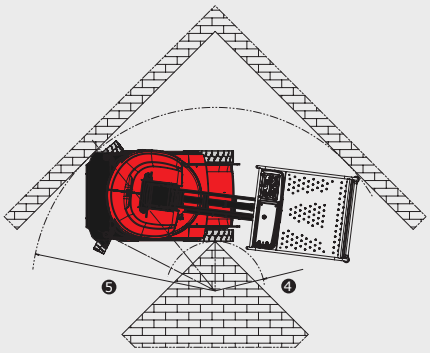

This brochure describes versions and configuration options for Manitou products which may be fitted with different equipment. The equipment described in this brochure may be standard, optional or not available depending on version. Manitou reserves the right to change the specifications shown and described at any time and without prior warning. The manufacturer is not liable for the specifications given. For more information, contact your Manitou dealer. Non-contractual document. Product descriptions may differ from actual products. List of specifications is not comprehensive. The logos and visual identity of the company are the property of Manitou and may not be used without authorisation. All rights reserved. The photos and diagrams contained in this brochure are provided for information only.
MANITOU BF SA - Limited company with board of directors - Share capital: 39,547,824 euros - 857 802 508 RCS Nantes

FT013EN_A_0812_80_100VJR

120 AETJ-C

	120 AETJ-C
Working height	11.95 m
Platform height	9.95 m
Articulation height	4.77 m
Outreach	7.00 m
Jib tilting	+70° / -70°
Jib Movemenent (option 3D)	+70° / -70°
Basket rotation	140°
Turret rotation	355°
Capacity	200 kg
Number of persons (indoor/outdoor)	2/2
Basket (width and length)	1.20 x 0.92 m
1. Overall width	1.20 m
2. Overall length	5.48 m
3. Overall height	1.99 m
4. Overall length when folded	3.74 m
5. Overall height when folded	2.16 m
6. Interior turning circle	1.55 m
7. Exterior turning circle	3.25 m
8. Exterior turning circle (option 3D)	3.44 m
9. Ground clearance	10 cm
10. Wheelbase	1.65 m
Speed of forward movement	6 kph
Working speed	0.60 kph
Maximum slope accessible	25 %
Maximum tilt	5 % / 3°
Tyres	0.60 x 0.19 m
Driving wheels	2 (back)
Steering/directional wheels	2 (front)
Weight (varies according to options & standards of the country)	6660 kg
Batteries	240 Ah / 2 x 24 V
Integrated charger	30 Ah / 48 V

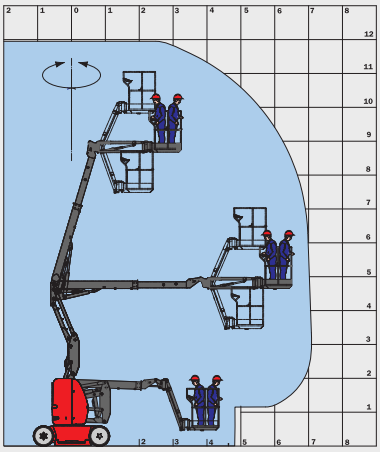

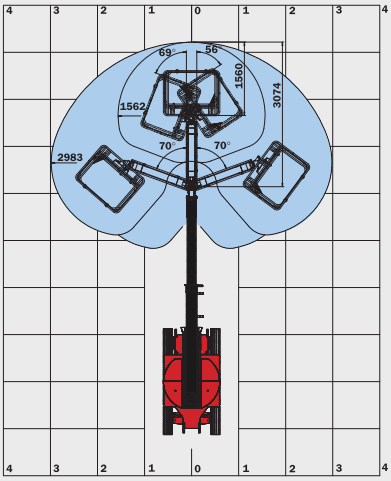

Option 3D: Jib Movemenent

Standard equipment
Proportional switches/levers
Forward movement possible at maximum height
Sound and visual alarm in case of excessive slant and overload
Integrated charger
Emergency manual descent
Negative braking system
Sound warning system inside the platform
Hour meter
Indication of state of charge of batteries
Hooks for sling loading/lifting
Integrated diagnostic aid
Predisposition 220V
Anti Roll System
Tyres with non-marking edges
Basket with transparent floor
Bus CAN technology
Tool box inside platform

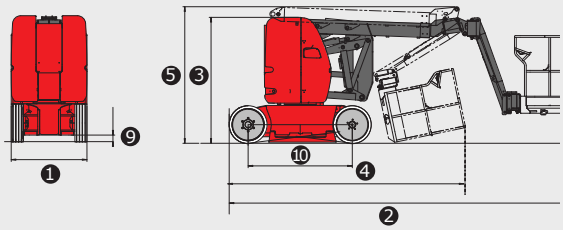

Optional equipment
Flashing lights
Working light
Predisposition of air
Predisposition of water
230V power input with differential circuit-breaker
Special paint
Biodegradable oil
Rotation of pendulum arm (3D)
High capacity battery (300 Ah / 2 x 24 V)
Central topping up of batteries
Warning signal moving forward
Warning signal for all movements
Protective cover for instruments panel
Initial certificate of verification prior to entry into service
Safety harness

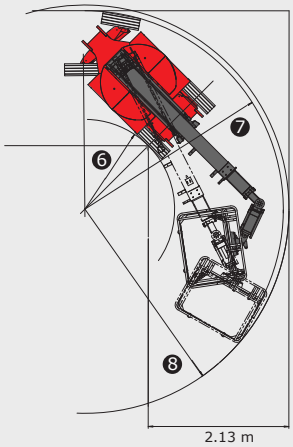

This brochure describes versions and configuration options for Manitou products which may be fitted with different equipment. The equipment described in this brochure may be standard, optional or not available depending on version. Manitou reserves the right to change the specifications shown and described at any time and without prior warning. The manufacturer is not liable for the specifications given. For more information, contact your Manitou dealer. Non-contractual document. Product descriptions may differ from actual products. List of specifications is not comprehensive. The logos and visual identity of the company are the property of Manitou and may not be used without authorisation. All rights reserved. The photos and diagrams contained in this brochure are provided for information only.
MANITOU BF SA - Limited company with board of directors - Share capital: 39,547,824 euros - 857 802 508 RCS Nantes

FT014EN_A_0812_120AETJC

150 AETJ-C

	150 AETJ-C
Working height	15 m
Platform height	13 m
Articulation height	7 m
Outreach	7.60 m
Jib tilting	+70° / -70°
Jib Movemenent (option 3D)	+70° / -70°
Basket rotation	140°
Turret rotation	355°
Capacity	200 kg
Number of persons (indoor/outdoor)	2/2
Basket (width and length)	1.20 x 0.96 m
1. Overall width	1.50 m
2. Overall length	6.05 m
3. Overall height	1.97 m
4. Overall length when folded	4.40 m
5. Overall height when folded	2.08 m
6. Interior turning circle	1.87 m
7. Exterior turning circle	3.96 m
8. Exterior turning circle	4.82 m
9. Ground clearance	14 cm
10. Wheelbase	2.00 m
Speed of forward movement	5 kph
Working speed	0.60 kph
Maximum slope accessible	25 %
Maximum tilt	5 % / 3°
Tyres	0.60 x 0.19 m
Driving wheels	2 (back)
Steering/directional wheels	2 (front)
Weight (varies according to options & standards of the country)	6700 kg
Batteries	240 Ah / 2 x 24 V
Integrated charger	45 Ah / 48 V

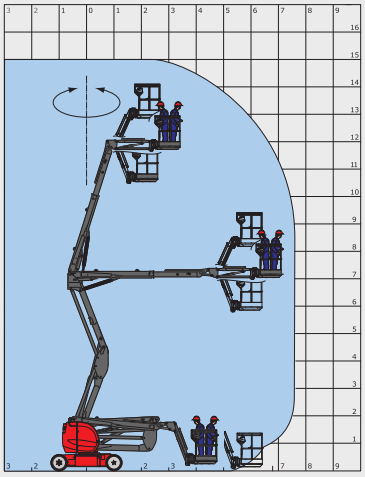

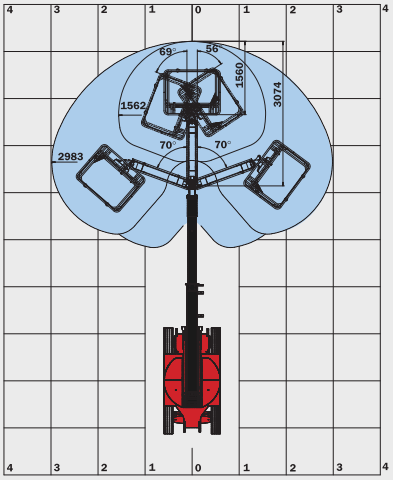

Option 3D: Jib Movemenent

Standard equipment
Proportional switches/levers
Forward movement possible at maximum height
Sound and visual alarm in case of excessive slant and overload
Integrated charger
Emergency manual descent
Negative braking system
Sound warning system inside the platform
Hour meter
Indication of state of charge of batteries
Hooks for sling loading/lifting
Integrated diagnostic aid
Predisposition 220V
Tyres with non-marking edges
Basket with transparent floor
Bus CAN technology
Tool box inside platform

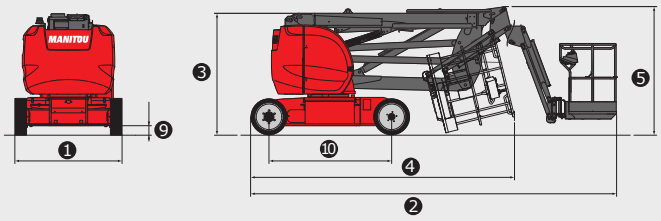

Optional equipment
Flashing lights
Working light
Predisposition of air
Predisposition of water
230V power input with differential circuit-breaker
Special paint
Biodegradable oil
Rotation of pendulum arm (3D)
High capacity battery (360 Ah)
Central topping up of batteries
Warning signal moving forward
Warning signal for all movements
Protective cover for instruments panel
Initial certificate of verification prior to entry into service
Safety harness

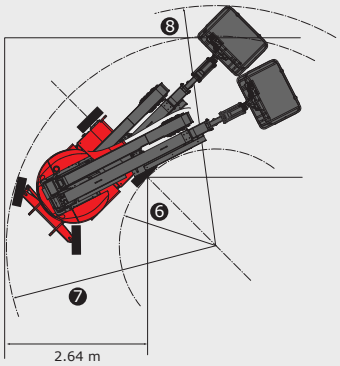

This brochure describes versions and configuration options for Manitou products which may be fitted with different equipment. The equipment described in this brochure may be standard, optional or not available depending on version. Manitou reserves the right to change the specifications shown and described at any time and without prior warning. The manufacturer is not liable for the specifications given. For more information, contact your Manitou dealer. Non-contractual document. Product descriptions may differ from actual products. List of specifications is not comprehensive. The logos and visual identity of the company are the property of Manitou and may not be used without authorisation. All rights reserved. The photos and diagrams contained in this brochure are provided for information only.
MANITOU BF SA - Limited company with board of directors - Share capital: 39,547,824 euros - 857 802 508 RCS Nantes

FT015EN_A_0812_150AETJC

170 AETJ-L

	170 AETJ-L
Working height	16.90 m
Platform height	14.90 m
Articulation height	7.15 m
Outreach	9.40 m
Jib tilting	+70° / -70°
Jib Movemenent (option 3D)	+70° / -70°
Basket rotation	140°
Turret rotation	355°
Capacity	200 kg
Number of persons (indoor/outdoor)	2/2
Basket (width and length)	1.20 x 0.96 m
1. Overall width	1.75 m
2. Overall length	6.84 m
3. Overall height	1.97 m
4. Overall length when folded	5.12 m
5. Overall height when folded	2.04 m
6. Interior turning circle	1.97 m
7. Exterior turning circle	4.30 m
8. Exterior turning circle	5.60 m
9. Ground clearance	14 cm
10. Wheelbase	2.00 m
Speed of forward movement	5 kph
Working speed	0.60 kph
Maximum slope accessible	22 %
Maximum tilt	5 % / 3°
Tyres	0.60 x 0.19 m
Driving wheels	2 (back)
Steering/directional wheels	2 (front)
Weight (varies according to options & standards of the country)	6910 kg
Batteries	240 Ah / 2 x 24 V
Integrated charger	45 Ah / 48 V

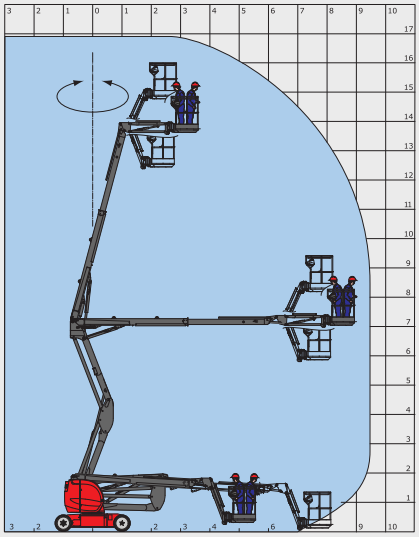

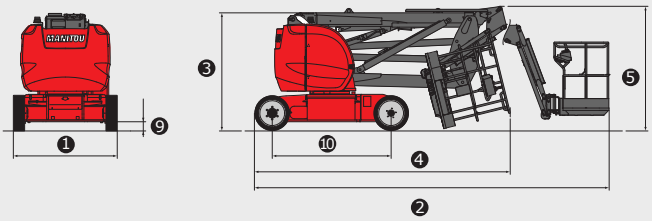

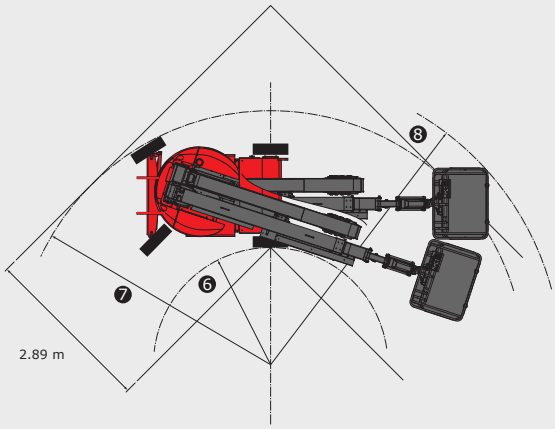

Standard equipment
Proportional switches/levers
Forward movement possible at maximum height
Sound and visual alarm in case of excessive slant and overload
Integrated charger
Emergency manual descent
Negative braking system
Sound warning system inside the platform
Hour meter
Indication of state of charge of batteries
Hooks for sling loading/lifting
Integrated diagnostic aid
Predisposition 220V
Tyres with non-marking edges
Basket with transparent floor
Bus CAN technology
Tool box inside platform

Optional equipment
Flashing lights
Working light
Predisposition of air
Predisposition of water
230V power input with differential circuit-breaker
Special paint
Biodegradable oil
High capacity battery (360 Ah)
Central topping up of batteries
Warning signal moving forward
Warning signal for all movements
Protective cover for instruments panel
Initial certificate of verification prior to entry into service
Safety harness

This brochure describes versions and configuration options for Manitou products which may be fitted with different equipment. The equipment described in this brochure may be standard, optional or not available depending on version. Manitou reserves the right to change the specifications shown and described at any time and without prior warning. The manufacturer is not liable for the specifications given. For more information, contact your Manitou dealer. Non-contractual document. Product descriptions may differ from actual products. List of specifications is not comprehensive. The logos and visual identity of the company are the property of Manitou and may not be used without authorisation. All rights reserved. The photos and diagrams contained in this brochure are provided for information only.
MANITOU BF SA - Limited company with board of directors - Share capital: 39,547,824 euros - 857 802 508 RCS Nantes

FT016EN_A_0812_170AETJL

150 AETJ-L / 170 AETJ-L

BI-ENERGY BI-ENERGY

	150 AETJ-L BI-ENERGY	170 AETJ-L BI-ENERGY
Working height	15.40 m	17 m
Platform height	13.40 m	15 m
Articulation height	7.27 m	
Outreach	7.81 m	9.43 m
Jib tilting	+70° / -70°	
Basket rotation	140°	
Turret rotation	355°	
Capacity	230 kg	
Number of persons (indoor/outdoor)	2/2	
Basket (width and length)	1.20 x 0.92 m	
1. Overall width	1.90 m	
2. Overall length	6.10 m	6.97 m
3. Overall height	2.10 m	
4. Overall length when folded	4.53 m	5.25 m
5. Overall height when folded	2.13 m	
6. Interior turning circle	1.97 m	
7. Exterior turning circle	4.27 m	
8. Exterior turning circle	4.85 m	
9. Ground clearance	17.5 cm	
10. Wheelbase	2.20 m	
Speed of forward movement	6 kph	
Working speed	0.60 kph	
Maximum slope accessible	25 %	21 %
Maximum tilt	9 % / 5°	
Tyres	27-10-12	
Driving wheels	2 (back)	
Steering/directional wheels	2 (front)	
Weight (varies according to options & standards of the country)	6435 kg	7435 kg
Batteries	300 Ah / 2 x 24 V	
Integrated charger	45 Ah / 48 V	
Engine	Lombardini FOCS 702 water cooled	
Power	9.20 kW	
Generator	5.70 kW / 48 V - 100 Amp / 2500 rpm	

150 AETJ-L

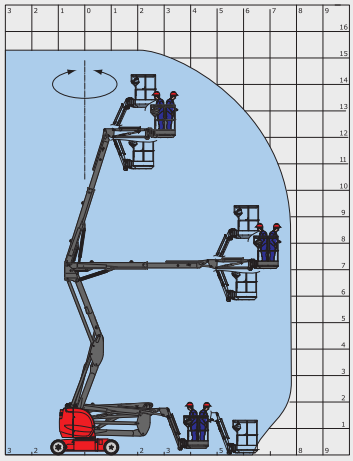

170 AETJ-L

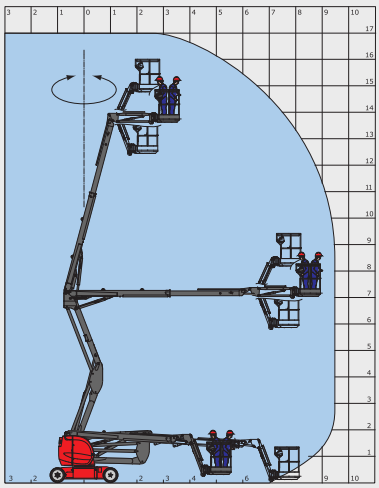

Standard equipment
Proportional switches/levers
Forward movement possible at maximum height
Sound and visual alarm in case of excessive slant and overload
Integrated charger
Emergency manual descent
Negative braking system
Sound warning system inside the platform
Hour meter
Indication of state of charge of batteries
Hooks for sling loading/lifting
Integrated diagnostic aid
Predisposition 220V
All road wheels – Non marking
Basket with transparent floor
Bus CAN technology
Tool box inside platform

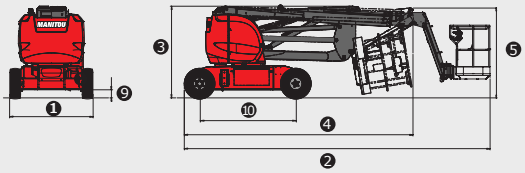

Optional equipment
Flashing lights
Working light
Predisposition of air
Predisposition of water
230V power input with differential circuit-breaker
Special paint
Biodegradable oil
Central topping up of batteries
Warning signal moving forward
Warning signal for all movements
Initial certificate of verification prior to entry into service
Safety harness
Oil for extreme low temperatures
Battery frost protection

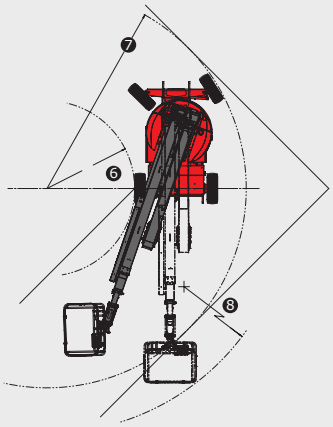

This brochure describes versions and configuration options for Manitou products which may be fitted with different equipment. The equipment described in this brochure may be standard, optional or not available depending on version. Manitou reserves the right to change the specifications shown and described at any time and without prior warning. The manufacturer is not liable for the specifications given. For more information, contact your Manitou dealer. Non-contractual document. Product descriptions may differ from actual products. List of specifications is not comprehensive. The logos and visual identity of the company are the property of Manitou and may not be used without authorisation. All rights reserved. The photos and diagrams contained in this brochure are provided for information only.
MANITOU BF SA - Limited company with board of directors - Share capital: 39,547,824 euros - 857 802 508 RCS Nantes

FT017EN_A_0812_AETJL_BiNRJ

78 SEC / 100 SEC

	78 SEC	100 SEC
Working height	7.79 m	9.92 m
Platform height	5.79 m	7.92 m
Capacity	227 kg	
Number of persons (indoor/outdoor)	2/1	2/-
Basket (width and length)	2.54 x 0.74 m	3.18 x 0.81 m
1. Overall width	0.81 m	
2. Overall length	1.83 m	2.44 m
3. Overall height	2.10 m	2.26 m
4. Overall length (with extension)	2.74 m	3.33 m
5. Overall height when folded	1.75 m	1.91 m
6. Interior turning circle	0 m	
7. Exterior turning circle	1.55 m	2.13 m
8. Ground clearance	6 cm	9 cm
9. Wheelbase	1.32 m	1.85 m
Speed of forward movement	4 kph	3.50 kph
Working speed	0.80 kph	
Speed (raise/lower)	16/25 secs	30/40 secs
Maximum slope accessible	25%	
Tyres (solid non marking)	30 x 11 x 20 cm	38 x 13 x 28 cm
Driving wheels	2 (front)	2 (front)
Steering/directional wheels	2 (front)	2 (front)
Weight (varies according to options & standards of the country)	1503 kg	1959 kg
Batteries	225 Ah / 4 x 6 V	
Integrated charger	19 Ah / 24 V	

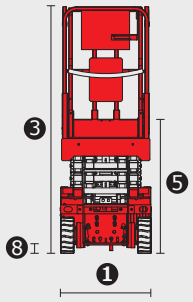

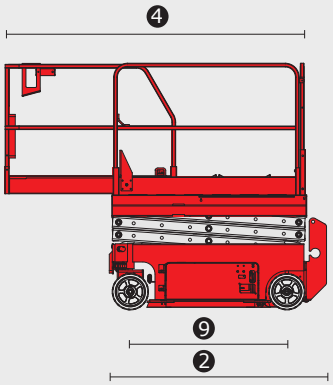

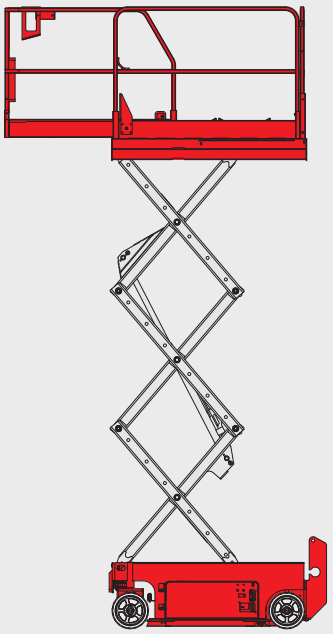

Standard equipment
Proportional switches/levers
Forward movement possible at maximum height
Sound and visual alarm in case of excessive slant and overload
Integrated charger
Emergency manual descent
Negative braking system
Sound warning system inside the platform
Hour meter
Indication of state of charge of batteries
Hooks for sling loading/lifting
Integrated diagnostic aid
Predisposition 220V
Anti Roll system
Tyres with non-marking edges
Access gate for platform
Folding guardrails
Multiple disc brakes on rear wheels
Removable control box
Flashing lights

Optional equipment
Working light
Predisposition of air
Special paint
Warning signal for all movements
Initial certificate of verification prior to entry into service
Safety harness

Cette publication présente le descriptif des versions et possibilités de configuration des produits Manitou qui peuvent différer en équipement. Les équipements présentés dans cette brochure peuvent être de série, en option, ou non disponibles suivant les versions. Manitou se réserve le droit, à tout moment et sans préavis, de modifier les spécifications décrites et représentées. Les spécifications portées n'engagent pas le constructeur. Pour plus de détails, contactez votre concessionnaire Manitou. Document non contractuel. Présentation des produits non contractuelle. Liste des spécifications non exhaustive. Les logos ainsi que l'identité visuelle de l'entreprise sont la propriété de Manitou et ne peuvent être utilisés sans autorisation. Tous droits réservés. Les photos et schémas contenus dans la présente brochure ne sont fournis qu'à des fins de consultation et à titre indicatif.
MANITOU BF SA - Société anonyme à conseil d'administration - Capital social : 39 547 824 euros - 857 802 508 RCS Nantes

FT018EN_A_0812_78_100SEC

120 SE

	120 SE
Working height	11.75 m
Platform height	9.75 m
Capacity	318 kg
Number of persons (indoor/outdoor)	2/1
Basket (width and length)	3.18 x 1.15 m
1. Overall width	1.17 m
2. Overall length	2.44 m
3. Overall height	2.39 m
4. Overall length (with extension)	3.33 m
5. Overall height when folded	1.80 m
6. Interior turning circle	0 m
7. Exterior turning circle	2.29 m
8. Ground clearance	10 cm
9. Wheelbase	1.85 m
Speed of forward movement	3.50 kph
Working speed	0.80 kph
Speed (raise/lower)	57/35 secs
Maximum slope accessible	25%
Tyres (solid non marking)	38 x 13 x 28 cm
Driving wheels	2 (front)
Steering/directional wheels	2 (front)
Weight (varies according to options & standards of the country)	2781 kg
Batteries	225 Ah / 4 x 6 V
Integrated charger	19 Ah / 24 V

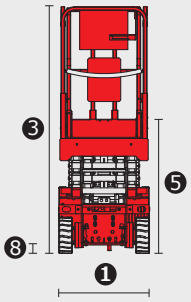

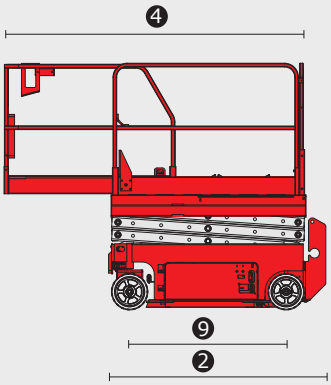

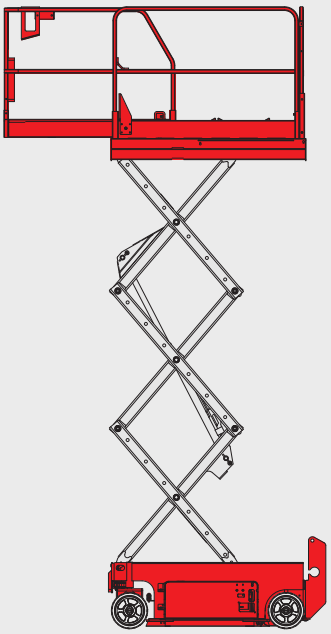

Standard equipment
Proportional switches/levers
Forward movement possible at maximum height
Sound and visual alarm in case of excessive slant and overload
Integrated charger
Emergency manual descent
Negative braking system
Sound warning system inside the platform
Hour meter
Indication of state of charge of batteries
Hooks for sling loading/lifting
Integrated diagnostic aid
Predisposition 220V
Anti roll system
Tyres with non-marking edges
Access gate for platform
Folding guardrails
Multiple disc brakes on rear wheels
Removable control box
Flashing lights

Optional equipment
Working light
Predisposition of air
Special paint
Warning signal for all movements
Initial certificate of verification prior to entry into service
Safety harness

This brochure describes versions and configuration options for Manitou products which may be fitted with different equipment. The equipment described in this brochure may be standard, optional or not available depending on version. Manitou reserves the right to change the specifications shown and described at any time and without prior warning. The manufacturer is not liable for the specifications given. For more information, contact your Manitou dealer. Non-contractual document. Product descriptions may differ from actual products. List of specifications is not comprehensive. The logos and visual identity of the company are the property of Manitou and may not be used without authorisation. All rights reserved. The photos and diagrams contained in this brochure are provided for information only.
MANITOU BF SA - Limited company with board of directors - Share capital: 39,547,824 euros - 857 802 508 RCS Nantes

FT019EN_A_0812_120SE

Your nearest **MANITOU** dealer:

MANITOU

Head office:
B.P. 249 - 430 rue de l'Aubinière - 44158 Ancenis Cedex - France
Tel: 00 33 (0)2 40 09 10 11 - Fax: 00 33 (0)2 40 09 10 97
www.manitou.com

700482EN_A_0812_AWP_ELEC